# Block anodes

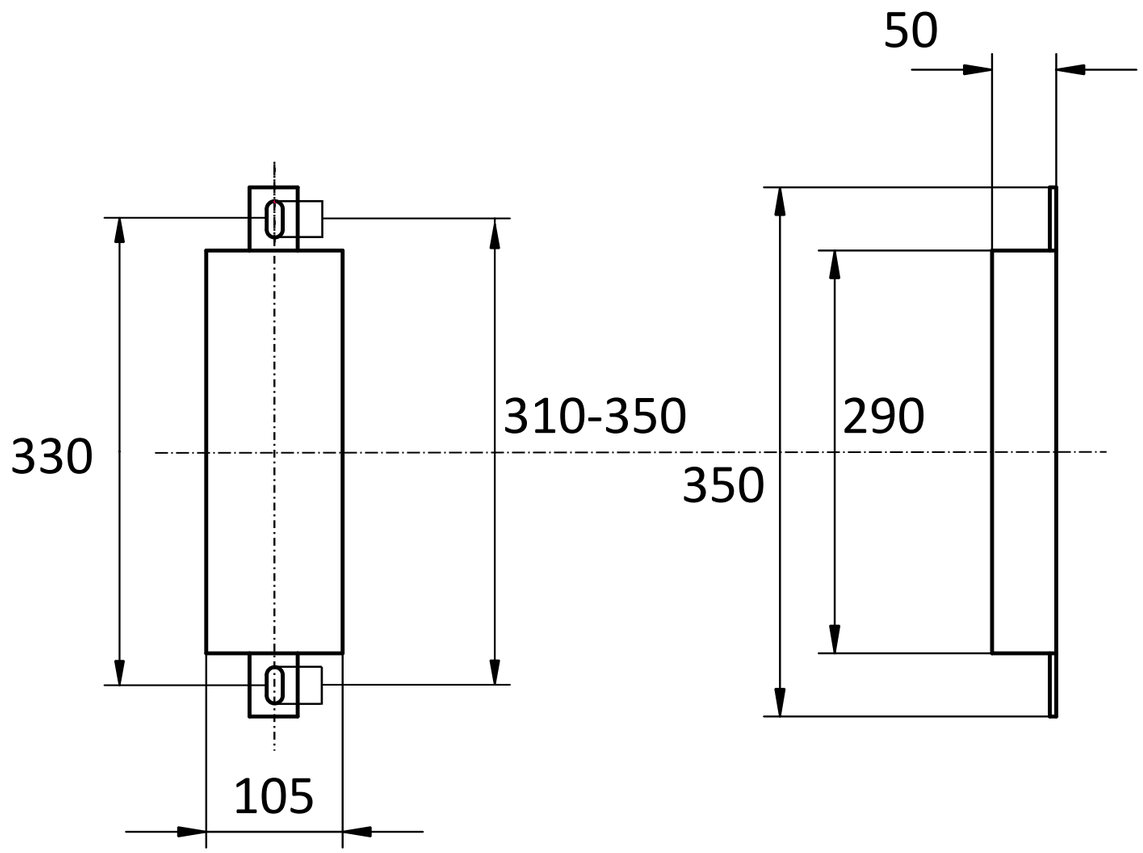


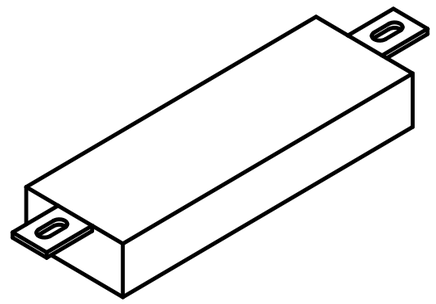

Tilted-view

| | | | |
|---|---|---|---|
| Anode Category : Block anodes | Article: 9309AL | | |
| Material: AlZn5In | Weight: 3,74kg | | |
| ISO (Norm) | (For information only, is not subject to change management) | Scale: / | Zst: Changes: Date: |