Anodes compatible with Volvo Penta

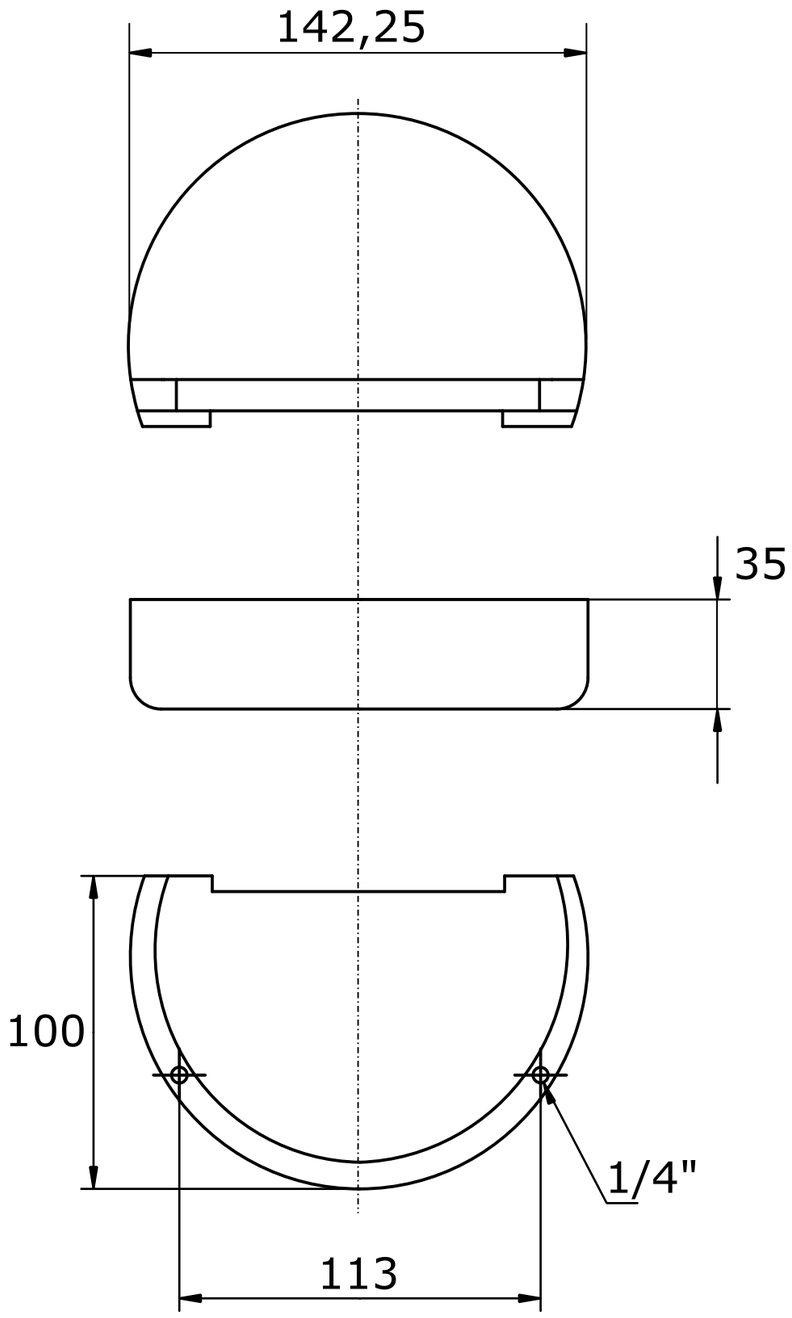

Reference number
3855411

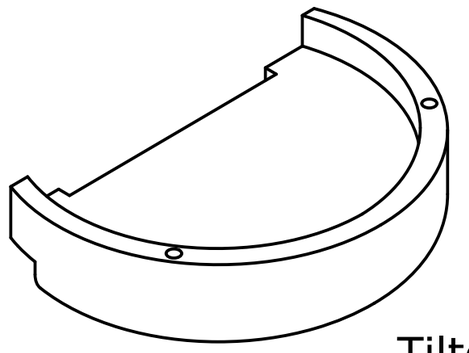

Tilted view

OPFERANODE24.DE	Anode Category : Anodes compatible with Volvo Penta	Article: 9236AL			
	Material: AlZn5In	Weight: 0,382kg			
ISO (Norm)	(For information only, is not subject to change management)	Scale: 1:1	Zst:	Changes:	Date: